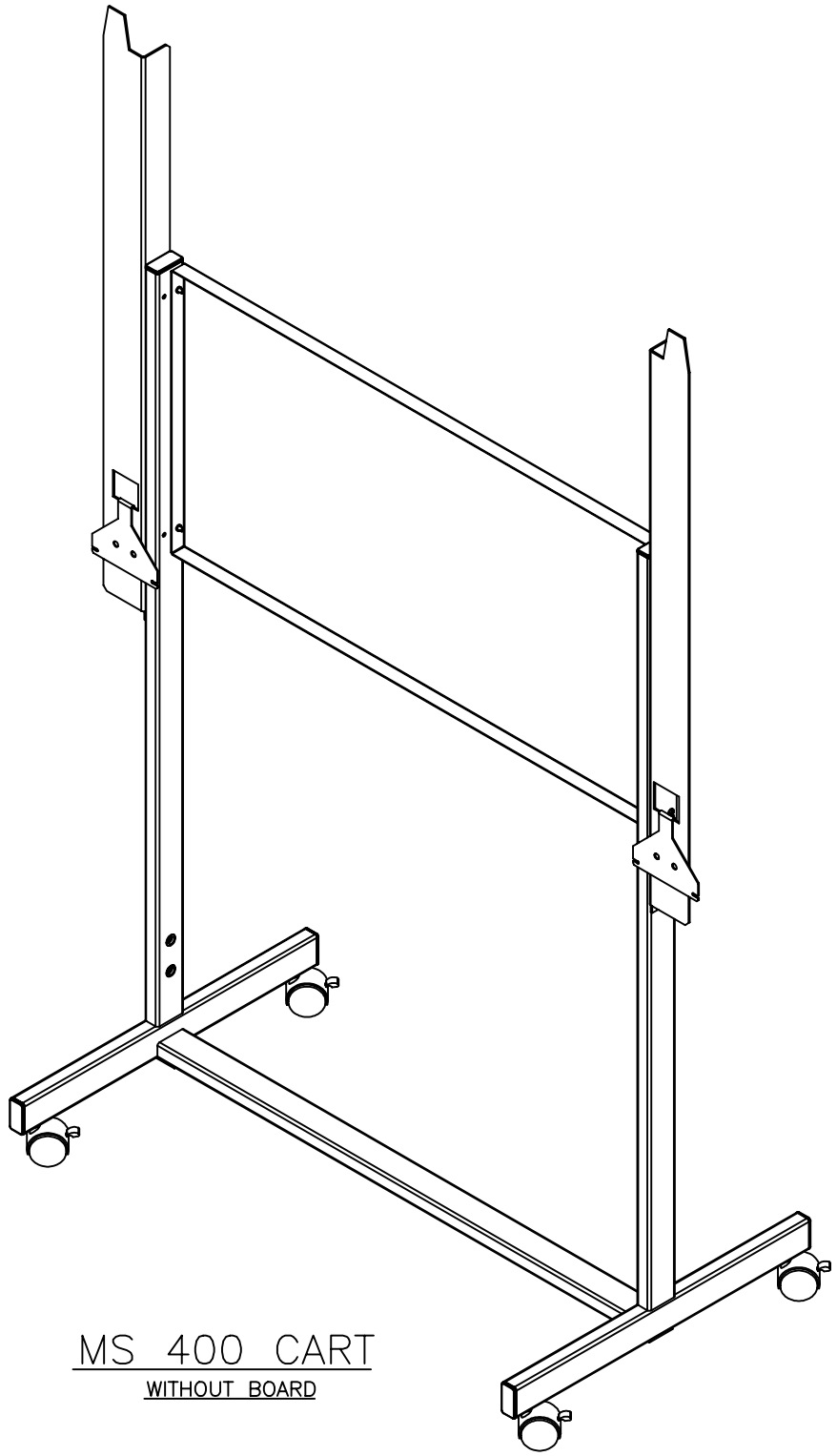

MS 400 CART
WITHOUT BOARD

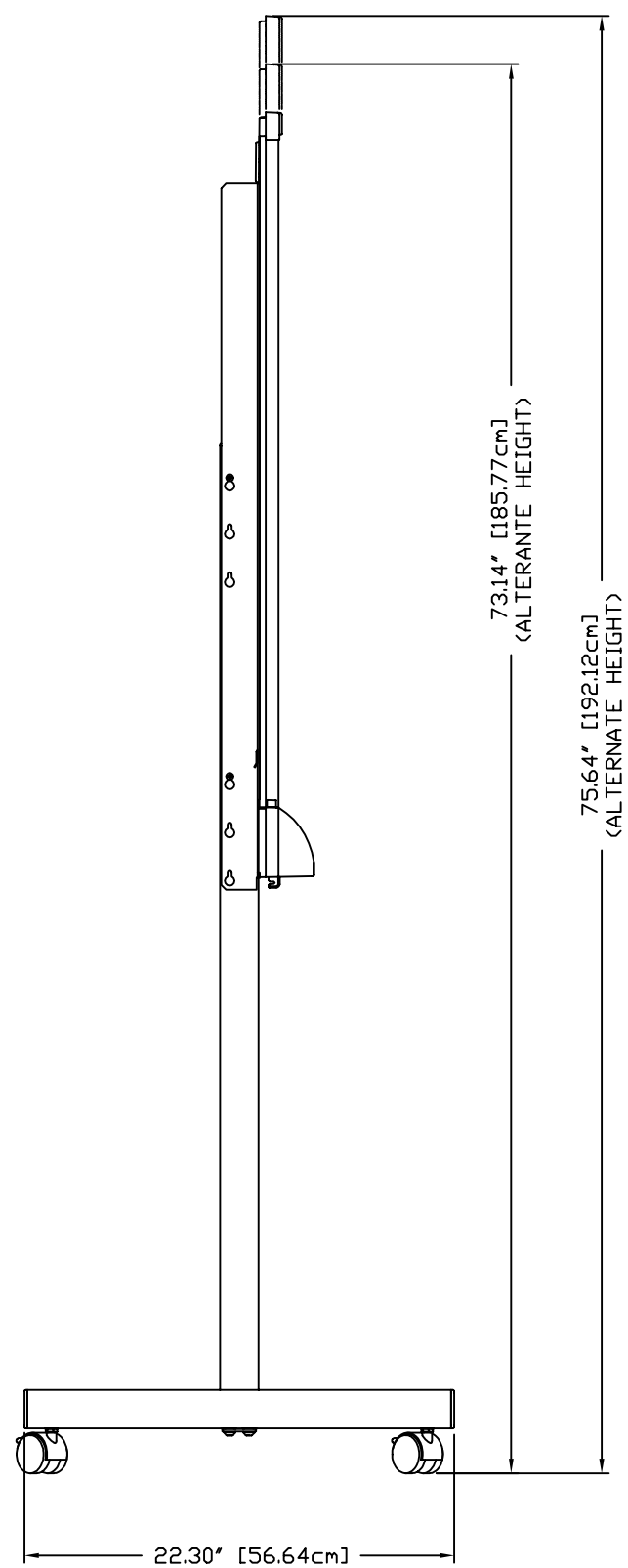

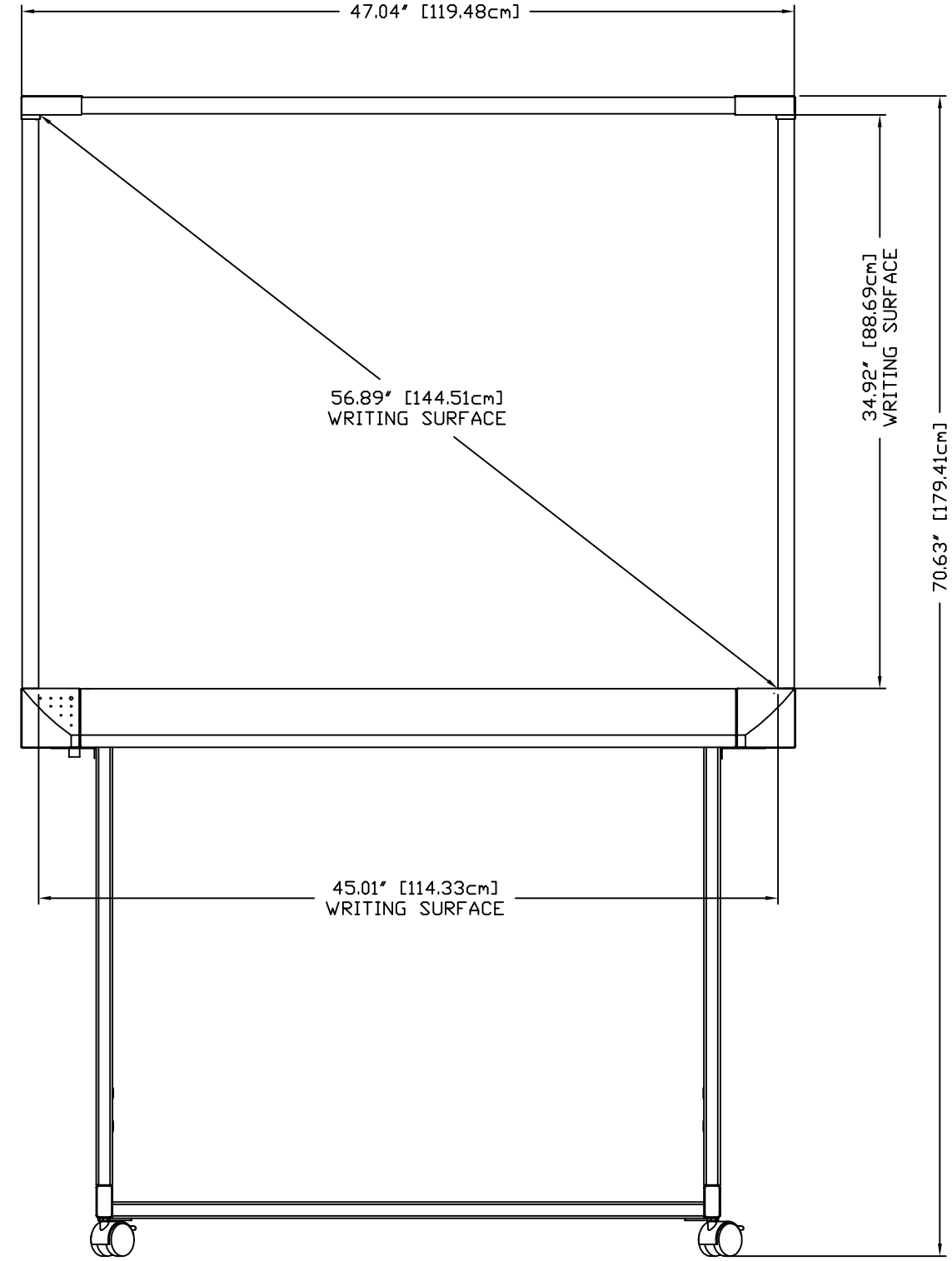

FRONT VIEW
WITH BOARD

NOTES: UNLESS OTHERWISE SPECIFIED

1. ALL SPECIFICATIONS ARE SUBJECT TO CHANGE WITHOUT NOTICE.

REV	DESCRIPTION	DCN	DATE
A	INITIAL RELEASE		9AUG02

POLYVISION CORPORATION
Interactive Products Group
14523 SW MILLIKAN WAY
BEAVERTON, OREGON 97005
PHONE 503 523 2000
FAX 503 523 2020

MATERIAL:
FINISH:

THE INFORMATION CONTAINED HEREIN IS PROPRIETARY, AND MAY NOT BE REPRODUCED OR COPIED WITHOUT PRIOR WRITTEN APPROVAL OF POLYVISION CORP

DRAWN: A.R.FRIEDMAN DATE: 9AUG02
APPVD. DATE:

UNLESS OTHERWISE SPECIFIED
TOLERANCES: .XX = ± .030
.XXX = ± .010
FRACTIONS = ± N/A
ANGLES = ± 1°
DIMENSIONS ARE IN INCHES

PROJECT: MS 400
CAD FILE: MS 400-SPEC
TITLE: MS 400 CART SPECIFICATIONS
DWG. NO. MS 400-SPEC
REV. A
SCALE: NONE
SIZE B
SHT 1 OF 1